- PROCESS QUALITY CONTROL */Confidential*

(QC FLOW CHART)

EPSONTOYOCOM CORP
SDBU
'09. 4. 28

No. Q-0101-02

GyroSensor : XV-3500CB , XV-8100CB

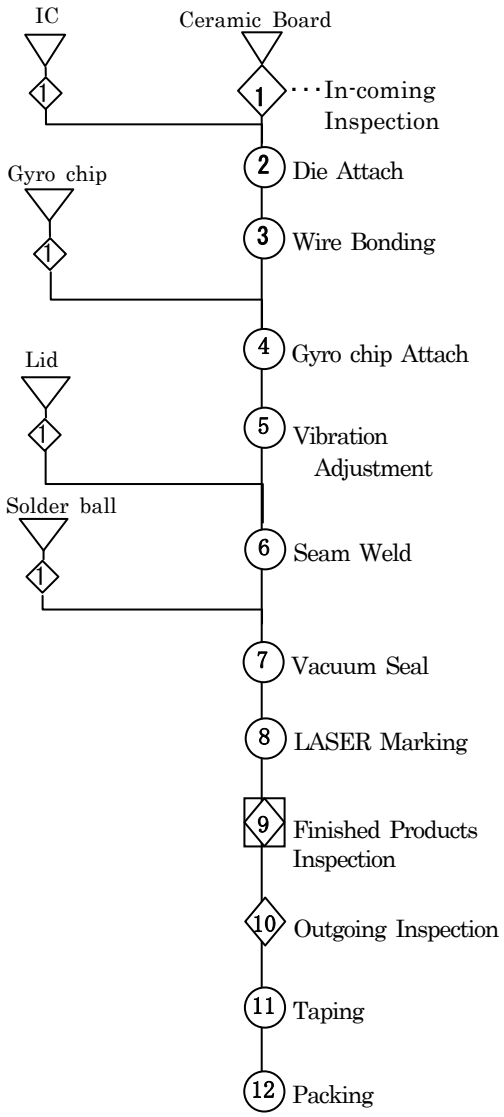

Manufacturing process chart	No.	Section In Charge	Standards	Inspection, Control Item	Instruments	Inspection Methods	Record
	1	Inspection Section	Purchasing Specification	Appearance Dimension	Microscope	Sampling	Data sheet
	2	Production Section	Manufacturing Instruction Sheet	Appearance Attached strength	Microscope Strength tester	Sampling	Data sheet
	3	Production Section	Manufacturing Instruction Sheet	Appearance Bonding strength	Microscope Tension gauge	Sampling	Data sheet
	4	Production Section	Manufacturing Instruction Sheet	Appearance Attached strength	Microscope Strength tester	Sampling	Data sheet
	5	Production Section	Manufacturing Instruction Sheet	Electrical characteristics Appearance	Inspection Tool Microscope	Sampling	Data sheet
	6	Production Section	Manufacturing Instruction Sheet	Appearance	Microscope	Sampling	Data sheet
	7	Production Section	Manufacturing Instruction Sheet	Appearance	Microscope	Sampling	Data sheet
	8	Production Section	Manufacturing Instruction Sheet	Appearance	Microscope	Sampling	Data sheet
	9	Production Section	Manufacturing Instruction Sheet	Electrical characteristics Appearance	Measuring equipment	All quantity inspection	Data sheet
	10	Inspection Section	Delivery Specification Outgoing inspection standard	Electrical characteristics Appearance	Measuring equipment	Sampling	Data sheet
	11	Production Section	Manufacturing Instruction Sheet	Appearance Tape peeling Strength	Peeling Strength test machine	Sampling	Data sheet
	12	Production Control Section	Manufacturing Instruction Sheet Daily Shipping List	Customers Type Quantity	———	———	Delivery Slip